# The Light Field

Electromagnetic waves; photons

Frequency spectra

and color

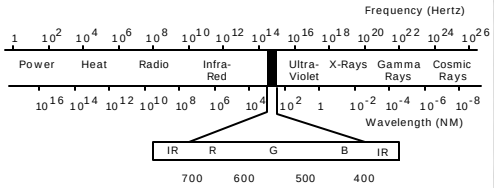


Polarization

Spatial distribution

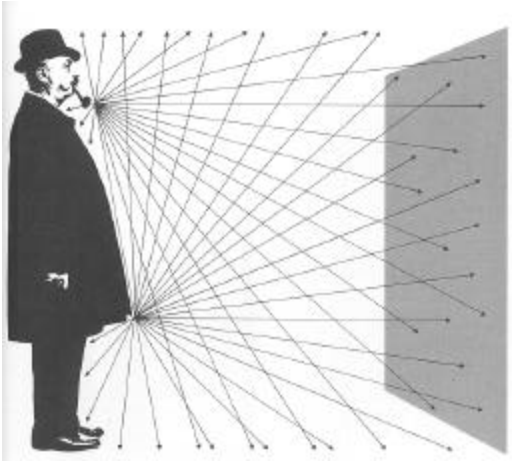

From London and Upton



# Questions

1. How is light measured?
2. How is the spatial distribution of light energy described?
3. How is reflection from a surface characterized?
4. What are the conditions for equilibrium flow of light in an environment?

## Transport Theory

Transport theory is concerned with calculating how stuff Q flows in the environment.

- Mass m
- Charge q
- Radiant energy F

Transport quantities are built around a core of basic geometric ideas. These are tricky!

The easiest way to learn transport theory is to think in terms of particles (photons).



## Particle Density

Phase Space

Particle characterized by position and velocity

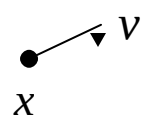


Particle densities

Ratio of number of particles to volumes (phase space)

$$\boxed{d^3x} \times \boxed{d^3v} \qquad n(x,v,t) = \lim_{\Delta^3 x \Delta^3 v \to 0} \frac{N(t)}{\Delta^3 x \Delta^3 v}$$

$$\Re^3 \times \Re^3$$

## Flows

Count particles crossing a surface

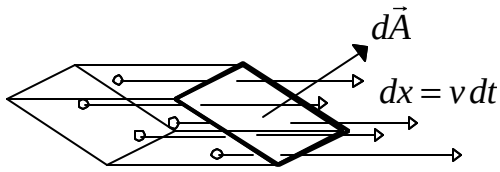


$$d^3x = v\cos q\; dA = (\vec{v}\,dt) \bullet d\vec{A}$$

$$Q(x,v) = n(x,v)\,d^3x = n(x,v)\,(\vec{v}\,dt) \bullet d\vec{A}$$

- Flux [Stuff/Time] (or Rate or Flow)

$$\Phi = \frac{dQ}{dt} = n(x,v)\vec{v} \bullet d\vec{A}$$

- Flux density [Stuff/(Time•Area)]

$$\Phi = \frac{d^2Q}{dt\,dA} = n(x,v)\vec{v} \bullet d\hat{A} = n(x,v)\,v\cos q$$



## Angles and Solid Angles

- Angle $q = \dfrac{length}{radius}$

  Þ circle has $2p$ radians

- Solid angle $\Omega = \dfrac{area}{radius^2}$

  Þ sphere has $4p$ steradians

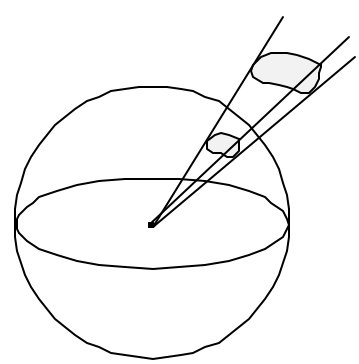

*If the area is not on the sphere, then the solid angle subtended by the area is equal to the area projected onto the unit sphere.*

## Differential Solid Angles

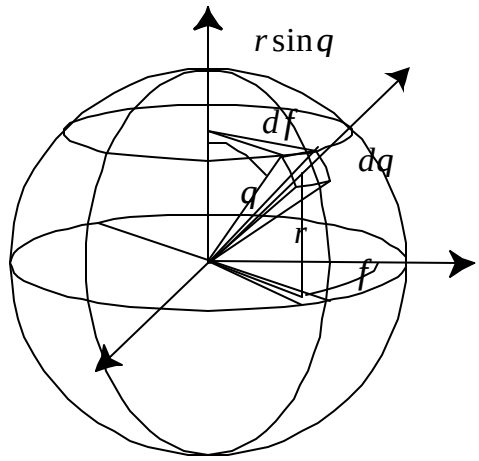


$$dA = (r\,dq)(r\sin q\,df)$$
$$= r^2 \sin q\,dq\,df$$

$$dw = \frac{dA}{r^2} = \sin q\,dq\,df$$

$$S = \int_0^p \int_0^{2p} \sin q\,dq\,df = 4p$$



## Radiance and Luminance

<u>Definition</u>: The *radiance* (*luminance*) is the power per unit projected area perpendicular to the ray per unit solid angle in the direction of the ray.

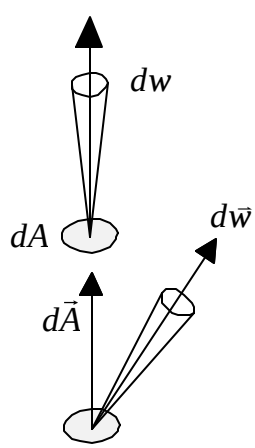


$$L(x,w) = \frac{d^2\Phi}{d\vec{w} \bullet d\vec{A}}$$

$$d^2\Phi = L(x,w)\,d\vec{w} \bullet d\vec{A}$$
$$= L(x,w)\cos q\,dw\,dA$$

## Environment Maps

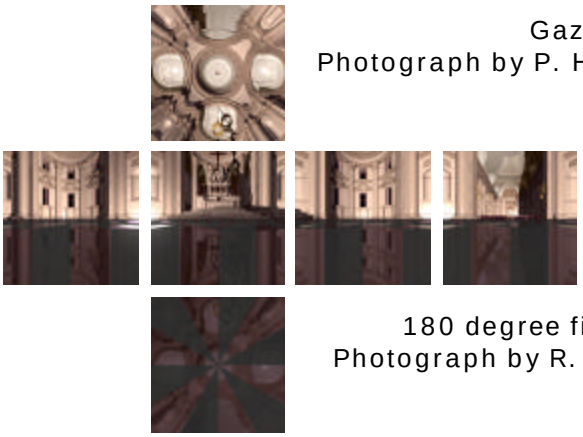

Cubical Environment Map

Gazing Ball
Photograph by P. Haeberli

180 degree fisheye
Photograph by R. Packo

## Spherical Light Field

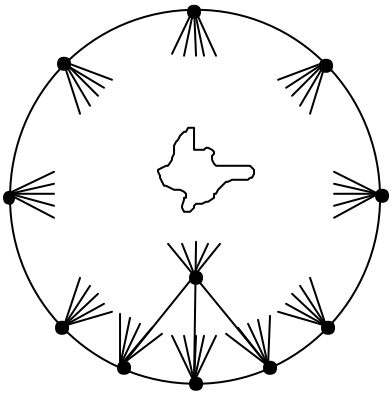

Capture all the light leaving
an object - like a hologram

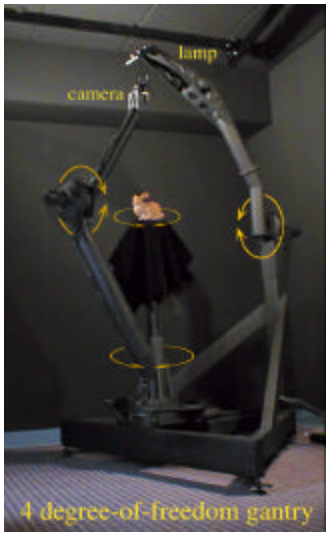

## Two-Plane Light Field

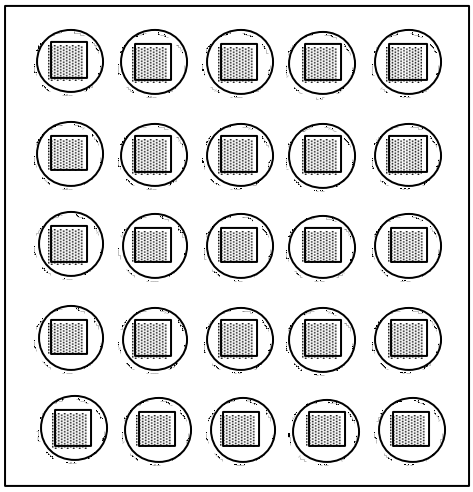

2D Array of Cameras

2D Array of Images



## Radiant Energy and Power

Power: Watts vs. Lumen

- Energy efficiency
- Spectral efficacy

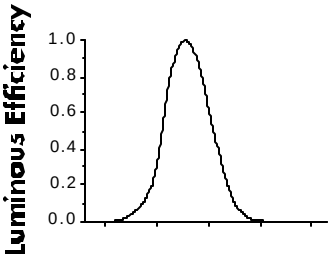


Energy: Joules vs. Talbot

- Since the velocity of light is so fast, may typically ignore distinction between power and energy
- Exposure - Reaction rates
  - Film response
  - Skin - sunburn

## Radiometry vs. Photometry

- Radiance and Radiometry [Units = Watts]

  *Physical measurement of electromagnetic energy.*

- Luminance and Photometry [Units = Lumen]

  *Perceptual measurement of relative subjective sensation due to light of different wavelengths.*

- Brightness [Units = Brils]

  *Perceptual measurement of the relative perceived sensation of light of different intensities.*



## Properties of Radiance

1. Fundamental field quantity that characterizes the distribution of light in an environment.
   - All other quantities are derived from it.
2. Radiance invariant along a ray.
   - Energy and throughput conserved implies radiance conserved.
3. Response of a sensor proportional to radiance.

## Radiance: 1st Law

The radiance in the direction of a light ray remains constant as the ray propagates.

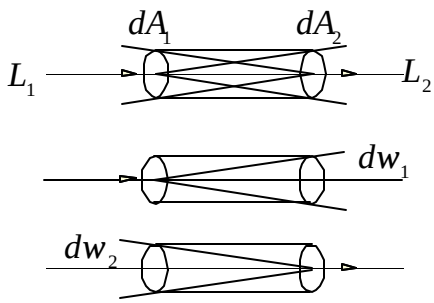


$$d\Phi_1 = L_1 dw_1 dA_1 = L_2 dw_2 dA_2 = d\Phi_2$$

$$dw_1 = dA_2 / r^2$$
$$dw_2 = dA_1 / r^2$$

$$dw_1 dA_1 = \frac{dA_1 dA_2}{r^2} = dw_2 dA_2$$

$$\therefore L_1 = L_2$$

***L** is the numeric quantity that should be associated with rays in ray tracers.*



## Radiance: 2nd Law

The response of a sensor is proportional to the radiance of the surface visible to the sensor.

L is what should be computed and displayed.

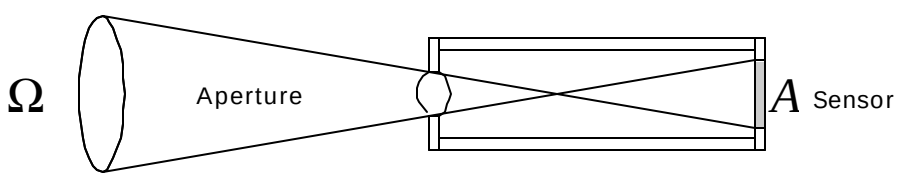


$$R = \int_A \int_\Omega L \cos q \; dw \, dA = L \int_A \int_\Omega \cos q \; dw \, dA = LT$$

Throughput $T = \int_A \int_\Omega \cos q \; dw \, dA$

## Quiz 1

Does radiance increase under a magnifying glass?

*NO!!*

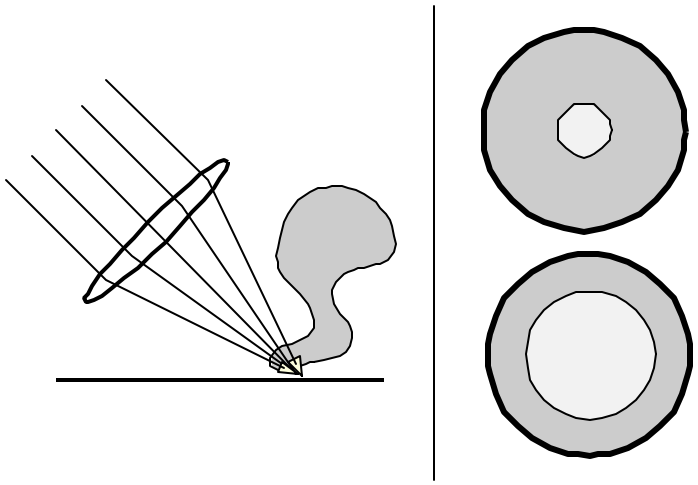



## Quiz 2

Does the brightness that a wall appears to the eye depend on the distance of the viewer to the wall?
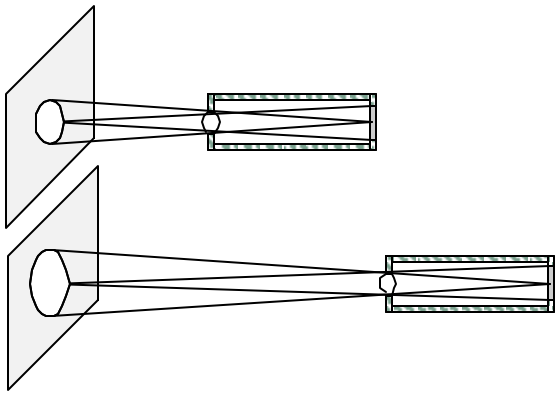
*NO!!*